Quadruplexer LTE700-GSM900 / GSM1800 / UMTS / LTE2.6

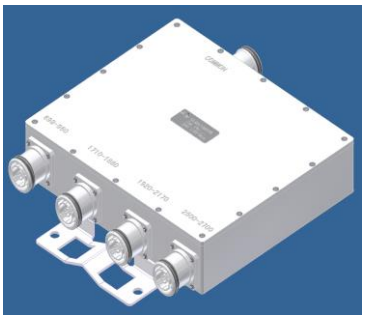

single unit

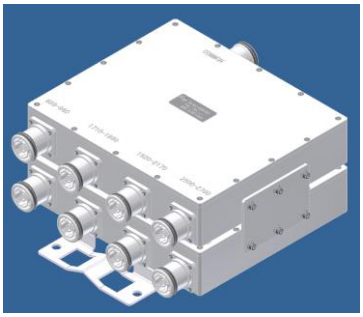

double unit

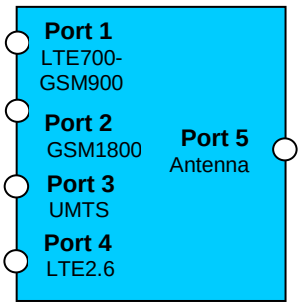

Block Diagram

Part number		**BN 570691**	**BN 570692**	**BN 570698**	**BN 570699**	**BN 570718**	**BN 570719**
Version		single	double	single	double	single	double
Connectors		7-16 female (50 Ohms)					
Frequency range	Port 1 Port 2 Port 3 Port 4	694 – 960 MHz (LTE700-GSM900) 1710 – 1880 MHz (GSM1800) 1920 – 2170 MHz (UMTS) 2500 – 2690 MHz (LTE2.6)					
Insertion loss	Port 1 → Port 5 Port 2 → Port 5 Port 3 → Port 5 Port 4 → Port 5	≤ 0.2 dB ≤ 0.4 dB ≤ 0.5 dB ≤ 0.3 dB					
Isolation		≥ 50 dB					
VSWR		≤ 1.25					
Power rating		≤ 250 W Avg.					
DC by-pass		All inputs → Port 5 (with DC auto identification function)		Only on port 4 ←→ Port 5 (bidirectional)		Only on port 3 ←→ Port 5 (bidirectional)	
		3A Max. / AISG Signal(2.176 MHz) per AISG 2.0					
Lightning protection		3 kA (10/350 µs pulse)					
Intermodulation products 3rd order @ 2 x 20 W		≤ -155 dBc					
Degree of protection mated / 1bar, 1h, ≤18°C		IP 65 indoor or outdoor use					
Class. of environmental conditions		ETSI EN 300019-1-1 Class 1.2 ETSI EN 300019-1-2 Class 2.3 ETSI EN 300019-1-4 Class 4.1E					
Temperature range		-40 °C – +65 °C					
Weight		4.0 kg	9.0 kg	4.0 kg	9.0 kg	4.0 kg	9.0 kg
Wall / Mast mounting		Part of delivery					

Dimensions:

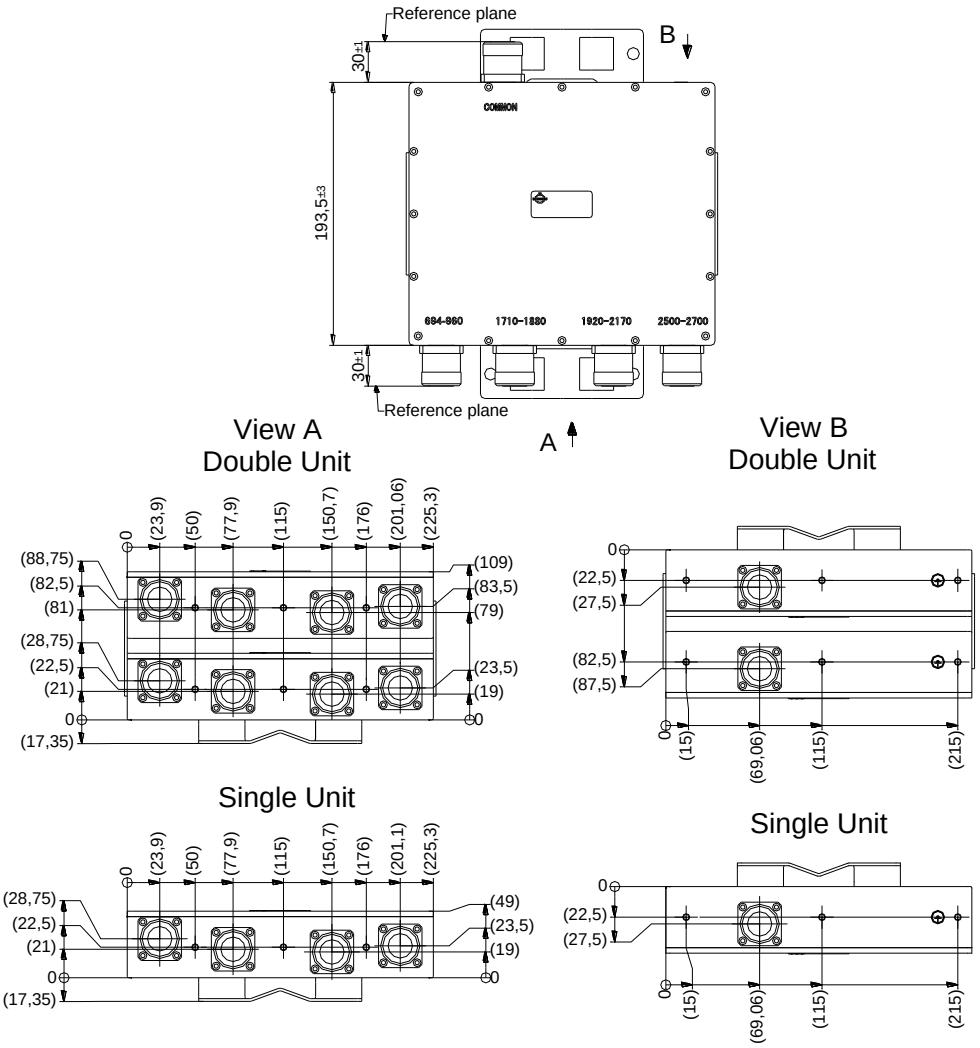

Measurements:

VSWR:

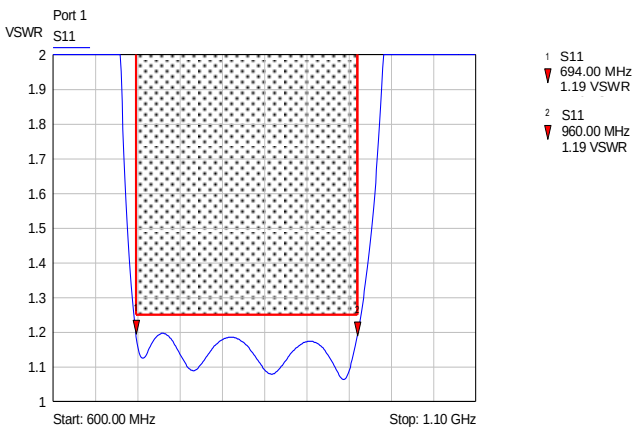

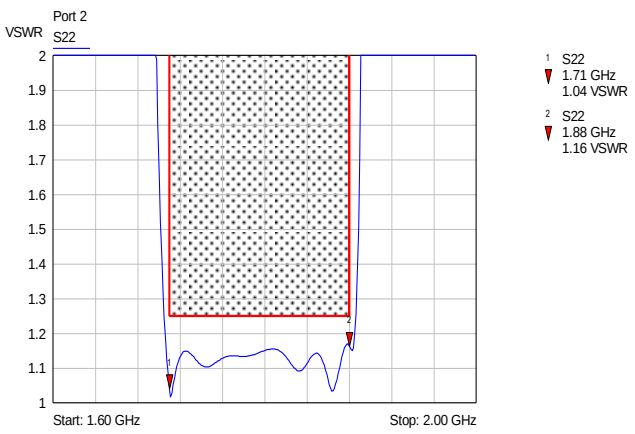

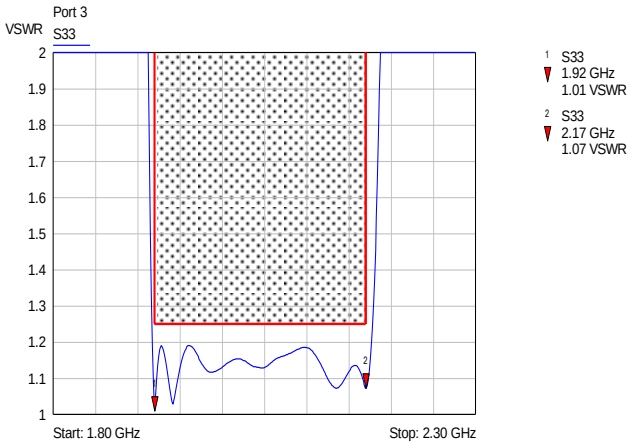

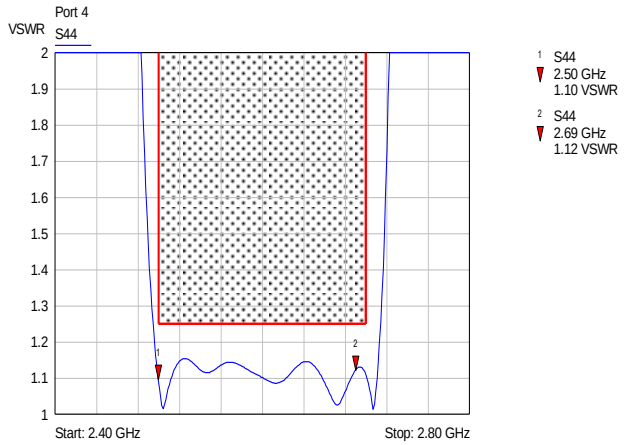

Insertion loss:

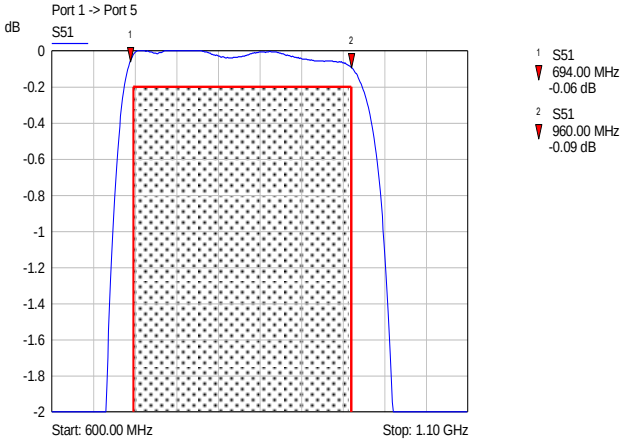

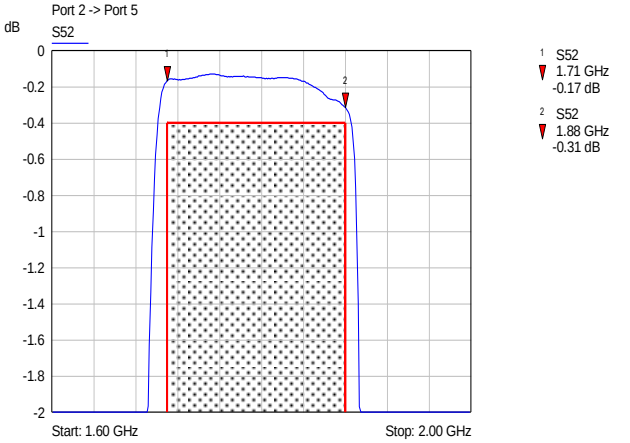

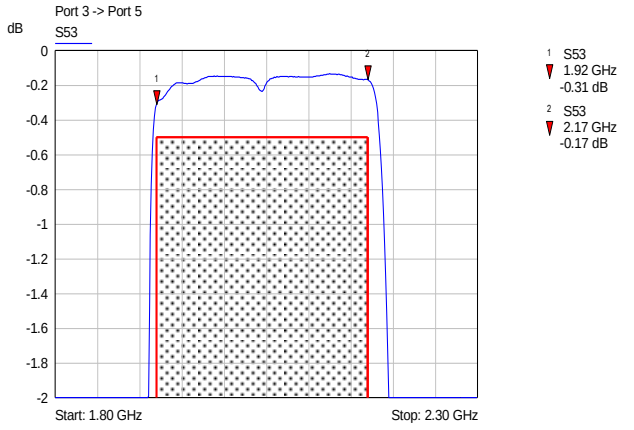

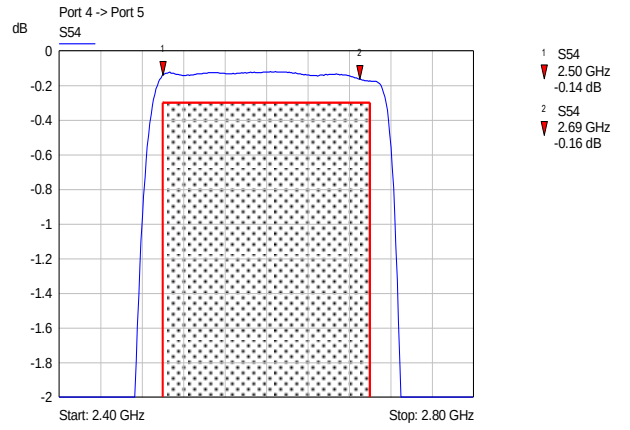

Isolation:

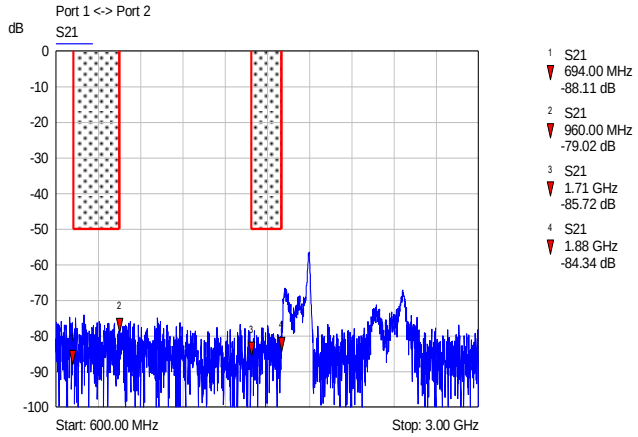
Port 1 <-> Port 2
S21
dB
0
-10
-20
-30
-40
-50
-60
-70
-80
-90
-100
Start: 600.00 MHz
Stop: 3.00 GHz
1 S21 694.00 MHz -88.11 dB
2 S21 960.00 MHz -79.02 dB
3 S21 1.71 GHz -85.72 dB
4 S21 1.88 GHz -84.34 dB

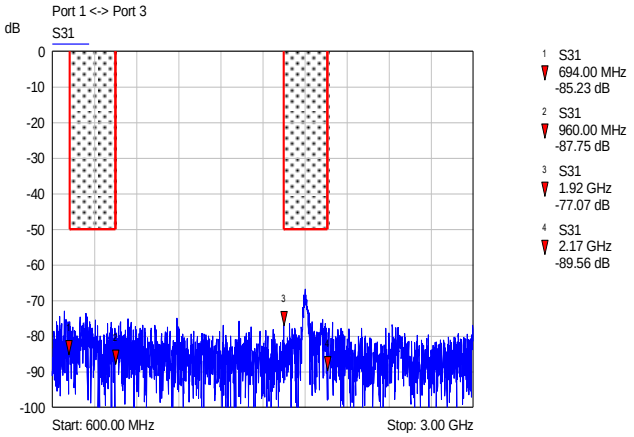
Port 1 <-> Port 3
S31
dB
0
-10
-20
-30
-40
-50
-60
-70
-80
-90
-100
Start: 600.00 MHz
Stop: 3.00 GHz
1 S31 694.00 MHz -85.23 dB
2 S31 960.00 MHz -87.75 dB
3 S31 1.92 GHz -77.07 dB
4 S31 2.17 GHz -89.56 dB

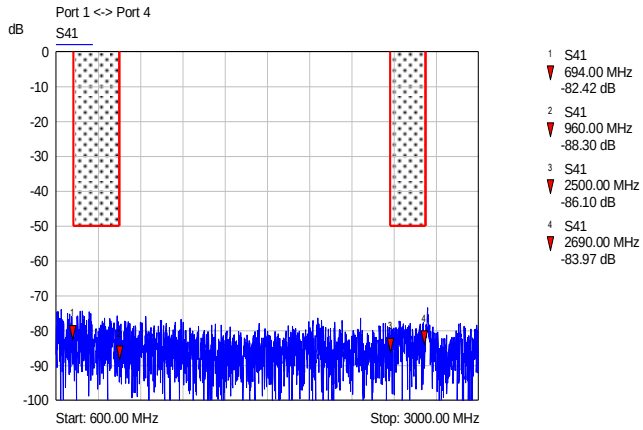
Port 1 <-> Port 4
S41
dB
0
-10
-20
-30
-40
-50
-60
-70
-80
-90
-100
Start: 600.00 MHz
Stop: 3000.00 MHz
1 S41 694.00 MHz -82.42 dB
2 S41 960.00 MHz -88.30 dB
3 S41 2500.00 MHz -86.10 dB
4 S41 2690.00 MHz -83.97 dB

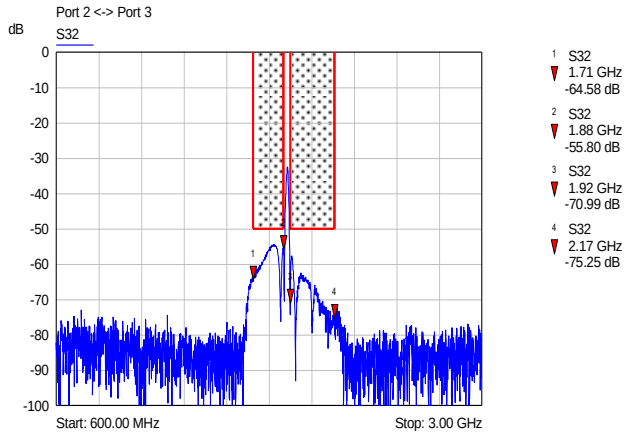
Port 2 <-> Port 3
S32
dB
0
-10
-20
-30
-40
-50
-60
-70
-80
-90
-100
Start: 600.00 MHz
Stop: 3.00 GHz
1 S32 1.71 GHz -64.58 dB
2 S32 1.88 GHz -55.80 dB
3 S32 1.92 GHz -70.99 dB
4 S32 2.17 GHz -75.25 dB

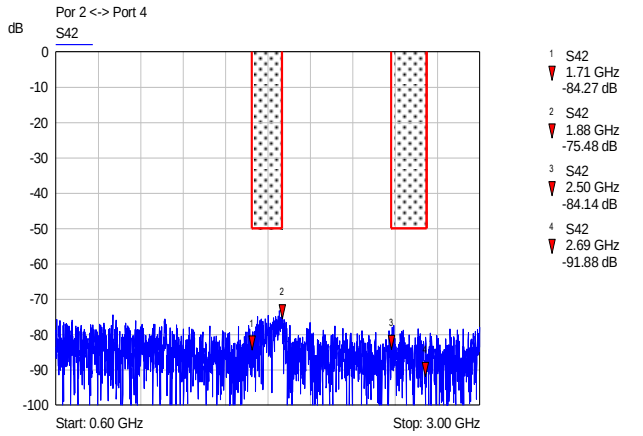
Por 2 <-> Port 4
S42
dB
0
-10
-20
-30
-40
-50
-60
-70
-80
-90
-100
Start: 0.60 GHz
Stop: 3.00 GHz
1 S42 1.71 GHz -84.27 dB
2 S42 1.88 GHz -75.48 dB
3 S42 2.50 GHz -84.14 dB
4 S42 2.69 GHz -91.88 dB

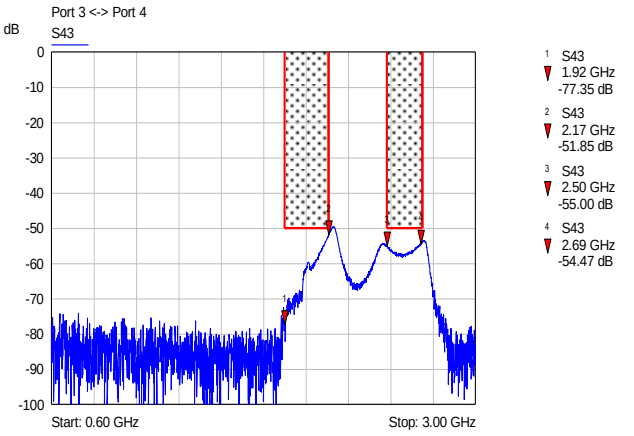
Port 3 <-> Port 4
S43
dB
0
-10
-20
-30
-40
-50
-60
-70
-80
-90
-100
Start: 0.60 GHz
Stop: 3.00 GHz
1 S43 1.92 GHz -77.35 dB
2 S43 2.17 GHz -51.85 dB
3 S43 2.50 GHz -55.00 dB
4 S43 2.69 GHz -54.47 dB